CURRENT EVENTS

ANSYS Software Licenses, Swing-arm Arrival, and Pit Bike Project

Hello Buckeye Current friends, family, alumni, and sponsors! The team's focus over the past month continues to be heavily simulation and design. In that same vein the team has recently partnered with ANSYS to receive software licenses for ANSYS Workbench. "The benefit of using ANSYS software is that we get more accurate results using a software that is purposefully built for these simulations" said Board Member Quincey Patterson who is working on analyzing the frame rails and rear uprights, "That way when we do destructive testing our actual test results should be closer to our simulation results." Once the team is confident that simulation results are accurate further iterations of a design won't require destructive testing to trust the respective simulation results. "Another useful tool within ANSYS software is topology optimization which allows us to design parts optimized for weight and space constraints. We also get access to the ANSYS Learning Hub so we can learn how to properly use these tools" Patterson said. On the aero side this software provides a method to run parametric analyses to understand the benefits of changing windshield angle and size and the benefits of streamlining the flow over the legs of the rider.

In the more physical realm the team has determined and purchased a new motor, in which the selection parameters and process is outlined in detail in the Technical Highlight section on page 2. Also in the past month the team decided to run a Yamaha YZF-R1 Swingarm on RW-4, which was received recently and shown in the photo above. This swingarm was chosen because it's inverted (upside down) so that the support goes under the chain rather than over it. Earlier in the design process the team thought we could put the motor under the seat but ended up not putting the motor there. However this style swingarm is still beneficial to our design because it gives us extra packaging space under the seat for cells. The next step for the swingarm is to transfer its dimensions to CAD so that it can be modeled within the full bike assembly. This process is generally done by "CMMing" which utilizes a coordinate measuring machine (CMM) that measures the geometry of physical objects by sensing discrete points on the surface of the object with a probe.

In addition to the new street racing vehicle the team is building for the Isle of Man we are also undertaking the conception of a smaller scale dirt bike conversion project. The motivation behind this project is to use the same battery module/system as RW-4 so that the team can test powertrain components while giving younger team members an opportunity to learn these systems and testing conditions. Although this vehicle is not a conventional pit bike, the name stuck and that is how the team referrs to this project. More updates to come next month!

Recent Alumni 3-1 Donation Match!

Calling all recent OSU alumni!!! From the time you're reading this until Wednesday Nov. 21 any donation made by alumni from the graduating classes of 2009-2018 will be matched 3-1 (aka if you give $25 the team receives $100). We don't ask for monetary support very often, so if you are looking to give to the team now is the time - any amount helps! Click the photo to the right and specify "Buckeye Current" in the comments to make sure that the team is the recipient of your donation.

Technical Highlight: New Motor Selection

Historically from one race season to the next, the team does not change which motor is on our vehicle. For the past four years at Pikes Peak the team used an Emrax 268 MV axial flux motor paired with different combinations of invertors and battery packs. However, when considering the different challenges posed by the Isle of Man the Emrax 268 did not meet the teams simulated requirements as this motor didn't have enough power to reach our target simulated average speed. Using the Torque-Speed and efficiency curves for 5 different motors in SimBAlink, estimated average speed each motor could achieve was determined. The motors the team simulated were an Emrax 268, a twin Emrax 228 (2 Emrax 228's running simultaneously), a Remy hvh 250 90s, a Parker GVM 210-150, and a Parker GVM 210-100. To account for differences in motor speeds and torques, an optimization script was run on the gear ratio to find the best ratio for each motor.

The two major considerations in final selection were the simulated speed and packaging. The last four motors (everything except the 268) simulated average lap times faster than 130mph. Of those four the packaging of the Parker GVM 210-100 was determined to be the simplest to integrate with our chassis design.

One of the key changes in the motor this year is the switch from an axial flux (Emrax) to radial flux (Parker). The radial flux motor is heavier than the axial flux, but this increased thermal mass will allow the Parker motor to operate at its peak power level longer than the Emrax could. This was one of the reasons we saw better performance from the Parker motor. Parker is also currently working on a manufacturing process for a new winding configuration that will increase efficiency at high RPMs and voltages by more than 10%. The team will be one of the first to receive this new winding configuration.

Emrax 268 MV Axial Flux Electric Motor

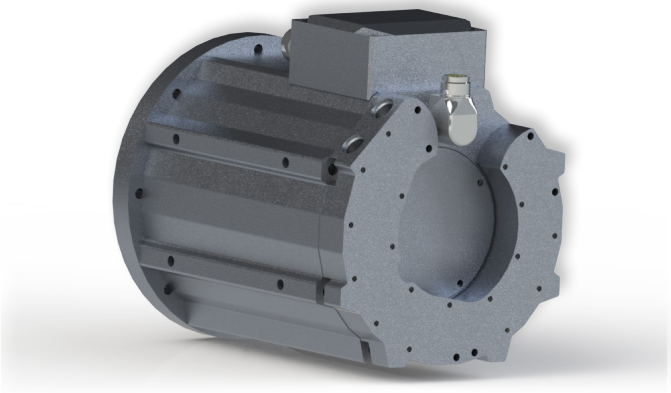

Parker GVM 210-100 Radial Flux Electric Motor

Zachary Salyer

Hometown: Tipp City, Ohio

Year: Senior

Major: Mechanical Engineering

Hobbies: 2006 Ninja 650r, OSU Football

Projects: "Last year I designed fuse boards for the sense wires of the battery pack, this year I worked on the team's simulation tool to determine our powertrain components for the Isle. Now I'm working on my undergraduate research thesis which is making thermal models of our powertrain components (motor, inverter, radiators) to figure out our cooling system requirements. This year I am also working on the battery pack design."

Favorite Team Memory: "My favorite team experience was the first time we went to TRC. After working on the bike for months it was rewarding to finally see it running."

Favorite Part of OSU: "My favorite part of OSU has been my experience with CAR. There are so many interesting projects being worked on and has been a great preparation for a career in the automotive industry."